Brookline Industries
1624 South Clinton Street
Chicago, IL 60616 USA
http://brooklineind.com

1237S PIVOT SET

Template T-1237S Rev-1 Jan 2011

NOTE:
1. DO NOT SCALE DRAWING.
2. RIGHT HAND SHOWN.
3. SUITABLE REINFORCING BY OTHERS.
4. MAXIMUM DEGREE OF OPENING, TRIM PERMITTING 180°.

TOP PIVOT

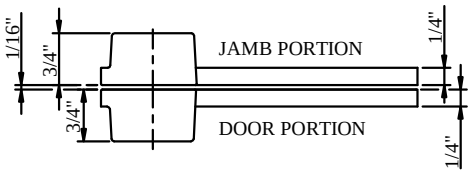

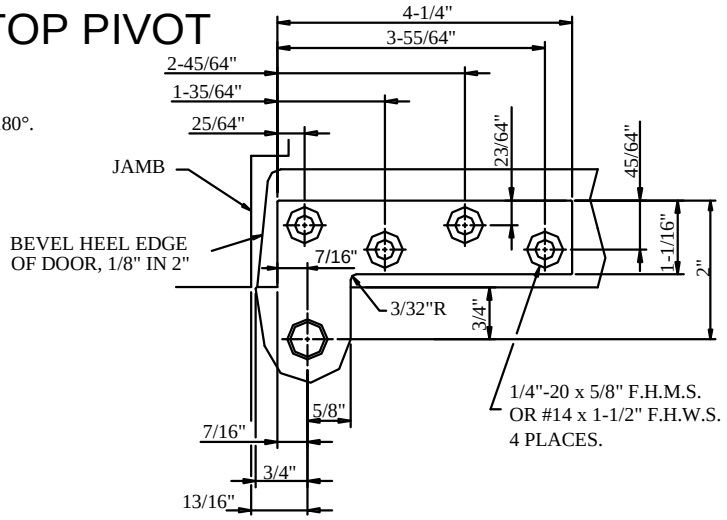

BOTTOM PIVOT

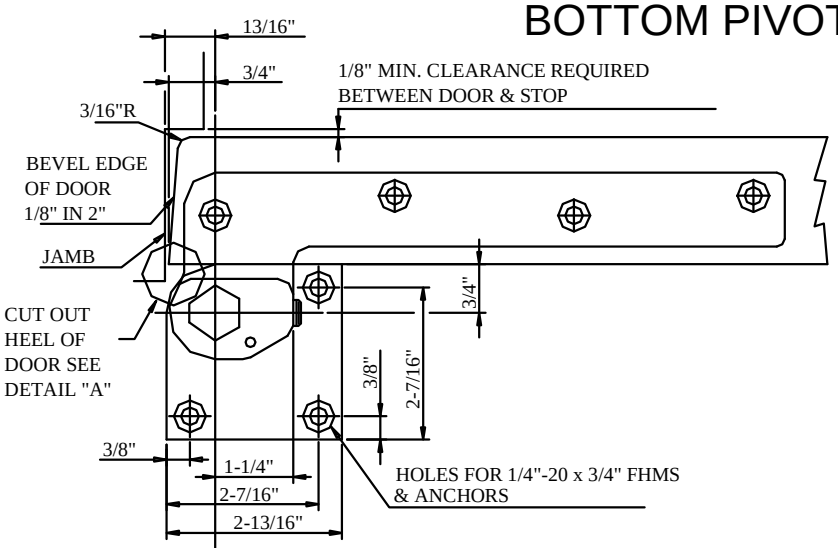

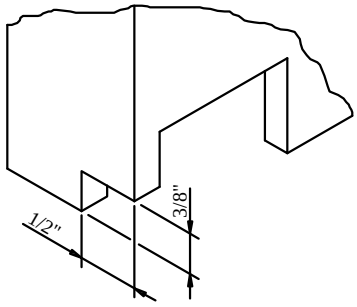

DETAIL "A"

℄ OF PIVOT

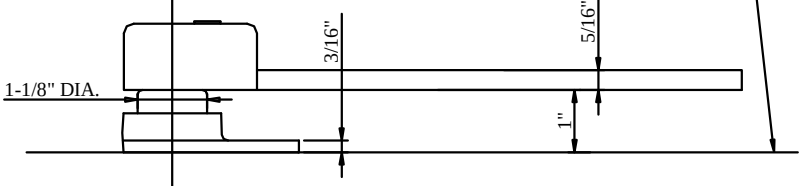

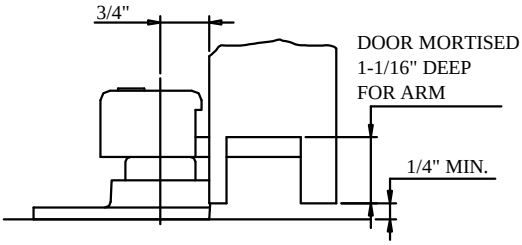

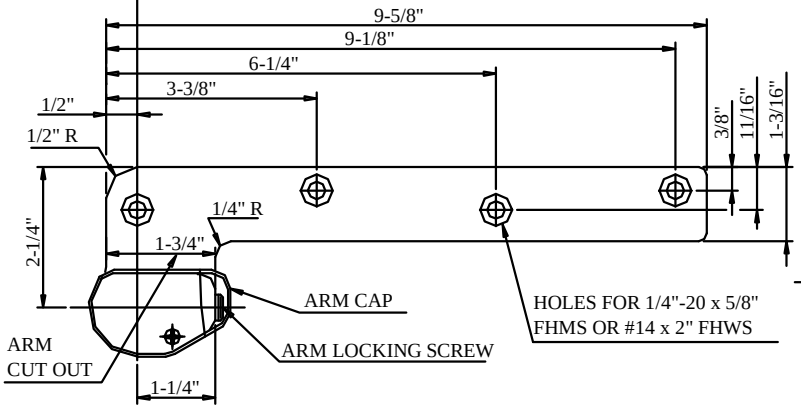

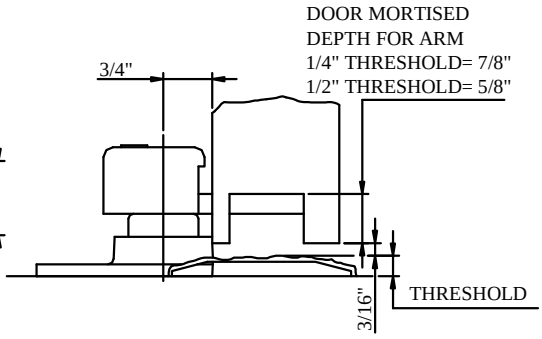

WITH THRESHOLD